ROK CUP TROPHY 2026

Extract from the ROK CUP TECHNICAL REGULATION Valid for ROK CUP SUPERFINAL 2026

ROK CUP TROPHY 2026 Technical Regulation
Approved by ACI SPORT on 20/01/2026

The updates are indicated in the table:

UPDATE HISTORY

UPDATE	APPROVAL DATE	PAGE
Addendum for ROK CUP SUPERFINAL Articles: 1, 1.1.3.a, 1.6.1, 1.6.2, 1.6.3, 2.4, 3, 5, 6.1, 7, 9	22/06/2026	
Erratum Art. 1.6.1, 1.6.2	16/09/2026	Page 6
Addendum Art. 1.6.3	30/09/2026	Page 7

(This is just a translation, in case of interpretative conflicts, the Italian text approved by ACI SPORT will prevail)

Introduction
Although not expressly indicated in this Technical Regulation, reference is made to the 2026 ACI Sport Karting RDS Technical Regulation, 2026 CIK FIA Regulation and subsequent amendments and additions which are hereby fully reported.

1. CATEGORIES:

- MINI ROK
- MINI ROK U10
- JUNIOR ROK
- SENIOR ROK
- EXPERT ROK
- EXPERT ROK PLUS
- SUPER ROK
- SHIFTER ROK
- VLR ROK
- VLR JUNIOR ROK

1.1.1 MINI ROK
Engine: Vortex MINI ROK 60cc complying with the current MINI ROK engine identification sheet (technical fiche) approved by ACI SPORT.
Carburettor: DELL'ORTO PHGB 18, it must maintain its original structure, it shall mount the same parts and shall be the same as the ones in the engine identification sheet (technical fiche), in order to allow at any time, the comparison of all components with a new carburettor. **Any kind of processing, connection, polishing, addition or removal of material is forbidden**. The threaded clamp described in the engine identification sheet (technical fiche), screwed onto the carburettor, is used to fix the intake silencer; the clamp must not interfere inside the homologated carburettor inlet.
The only components of the carburettor that can be changed are those described in the table in the engine identification sheet (technical fiche).
Clutch: Concerning the clutch housing with holes, it is mandatory to use the cover according to the engine identification sheet (technical fiche) of the Mini ROK engine.
Ignition: Described in the engine identification sheet (technical fiche). The admitted spark plug is the one described in the Mini ROK engine identification sheet (technical fiche).
Chassis: Brand and model must hold **current CIK FIA MINI Gr.3 homologation.**
All homologated components of the chassis must hold current CIK FIA homologation (brake system, bodyworks, rear wheel protection).
Front fairing: Mounting kit complying with the RDS ACI SPORT Karting Technical Regulation 2026, art. 4.14.2 art. 4.14.3 comma b-c-d-e-f-g
Pre-Race checks: Every driver can use:
2 chassis of the same **Brand**
2 engines.

1.1.2 MINI ROK U10
Engine: Vortex MINI ROK U10 60cc complying with the current MINI ROK U10 engine identification sheet (technical fiche) approved by ACI SPORT.
Carburettor: DELL'ORTO PHGB 18, it must maintain its original structure, it shall mount the same parts and shall be the same as the ones in the engine identification sheet (technical fiche), in order to allow at any time, the comparison of all components with a new carburettor. **Any kind of processing, connection, polishing, addition or removal of material is forbidden**. The threaded clamp described in the engine identification sheet (technical fiche), screwed onto the carburettor, is used to fix the intake silencer; the clamp must not interfere inside the homologated carburettor inlet.

The only components of the carburettor that can be changed are those described in the table in the engine identification sheet (technical fiche).
Clutch: Concerning the clutch housing with holes, it is mandatory to use the cover according to the engine identification sheet (technical fiche) of the Mini ROK U10 engine.
Ignition: Described in the engine identification sheet (technical fiche). The admitted spark plug is the one described in the Mini ROK U10 engine identification sheet (technical fiche).
Chassis: Brand and model must hold **current CIK FIA MINI Gr.3 homologation.**
All homologated components of the chassis must hold current CIK FIA homologation (brake system, bodyworks, rear wheel protection).
Front fairing: Mounting kit complying with the RDS ACI SPORT Karting Technical Regulation 2026, art. 4.14.2 art. 4.14.3 comma b-c-d-e-f-g
Pre-Race checks: Every driver can use:
2 chassis of the same **Brand**
2 engines.

1.1.3.a Rok Cup Superfinal's ENGINE DISTRIBUTION
In the Mini Rok and Mini Rok U10 categories the Rok Cup Superfinal will be reserved (limited number) and will be run with the ENGINES provided and allocated by drawing lots by the Promoter.
The maximum number of admitted drivers could differ and in this case, it will be specified in the Specific Race Regulations (RPG).

With ENGINE or ENGINES, we mean: Mini Rok / Mini Rok U10 engine (according to the driver's category) + carburettor + exhaust + airbox.
The engines and the parts supplied with it (Mini Rok / Mini Rok U10 (according to the driver's category) engine + carburettor + exhaust + airbox) will be identified with the same serial number and will be equipped with seals.
All drivers must have their own battery, battery support and wiring.

ENGINES will be distributed/assigned to each driver by drawing lots which will be done just before the official free practices in the presence of all drivers. The ENGINES must be used starting from the official free practices.

The ENGINE must be strictly original as supplied by the Promoter. It is not permitted to change, modify, add/remove any part, component, adjustment of the ENGINE or choose Options other than those provided.

At the end of each race session during the event, there might be a further draw for the ENGINE; in this case, each driver will be requested to leave the ENGINE and attend a new draw.

At the end of each stage of the race, the designated ACI Stewards, upon request of the designated ACI Technical Stewards, may decide to reassign ENGINES to some drivers only without having to do a new draw; this procedure will be carried out exclusively by the designated ACI Technical Stewards.

Guidelines and instructions regarding additional draws/reassignments of the ENGINE and/or related parts will be communicated to the drivers during the race by the designated ACI Technical Stewards.
Starting grid: Vortex technical team / staff may provide assistance on the kart.

Every time the drivers will return the ENGINES, a Vortex technician will verify eventual breaks, damages and/or missing parts and that seals are integral. In case of damage and /or missing parts, the relating costs will be charged to the driver who has just returned the ENGINE.
ENGINES must be returned clean at the end of the race.

The rental of the ENGINE will be managed by the Promoter itself, as indicated.

(This is just a translation, in case of interpretative conflicts, the Italian text approved by ACI SPORT will prevail)

The rental cost of the ENGINE will be defined by the Promoter.

GEAR RATIO, CHAIN, REAR SPROCKET

Mini Rok Category

For the Category Mini Rok the gear ratio (engine sprocket/rear sprocket) to be used on the chassis will be within the tolerance of ± 1 tooth on the rear sprocket:
engine sprocket 11 teeth
rear sprocket 81 (± 1 tooth)

Mini Rok U10 Category

For the Category Mini Rok U10 the fixed gear ratio (engine sprocket/rear sprocket) to be used on the chassis will be:
engine sprocket 11 teeth
rear sprocket 81 teeth.

Furthermore, the following is specified:
-the chain to be used is always **the chain type "219"**
-the rear sprocket to be used must be marked OTK as the one in the photo, pitch 219, and the outline design must be the same as the one in the photo:

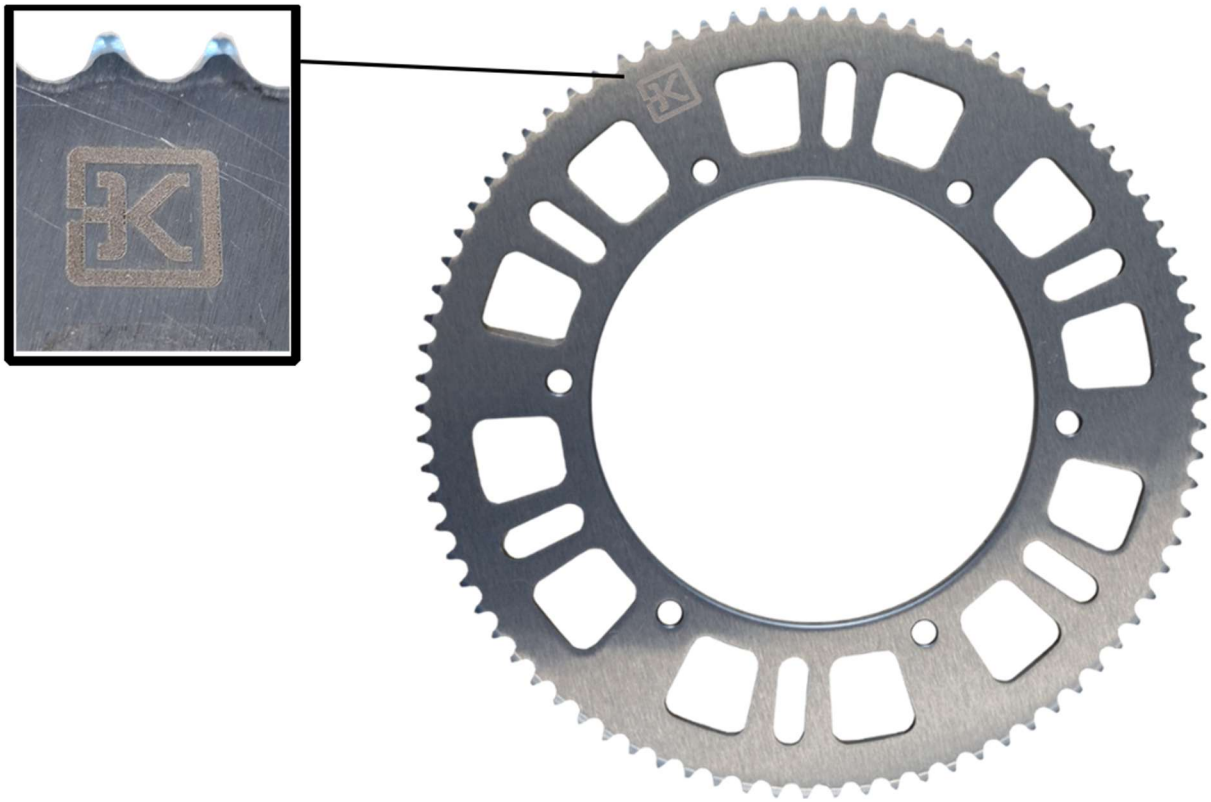

(This is just a translation, in case of interpretative conflicts, the Italian text approved by ACI SPORT will prevail)

1.1.4 TRANSPONDER POSITION
In the Mini ROK and Mini ROK U10 categories it is mandatory to position the transponder on the left side (brake caliper side) of the seat back as indicated in the photo, and not on the engine side.

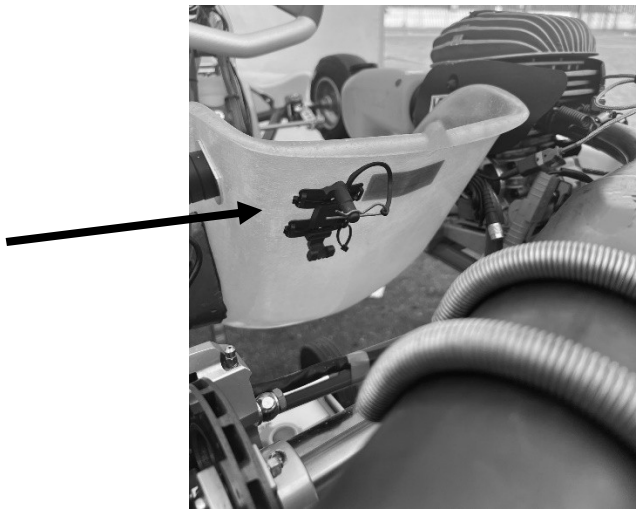

1.2 JUNIOR ROK
Engine: Vortex ROK GP JUNIOR 125cc complying with the current ROK GP JUNIOR engine identification sheet (technical fiche) approved by ACI SPORT.
Carburettor: DELL'ORTO VHSH 30, it must maintain its original structure, it shall mount the same parts and shall be the same as the ones in the engine identification sheet (technical fiche), in order to allow at any time, the comparison of all components with a new carburettor. **Any kind of processing, connection, polishing, addition or removal of material is forbidden**. **The only components of the carburettor that can be changed are those described in the table in the engine identification sheet (technical fiche).**
Cooling: Use of **only one (1)** radiator.
It is mandatory to use the original complete water pump, water pump pulley and radiator supplied with the engine.
The aforementioned parts must comply with the identification sheet (technical fiche) of the ROK GP JUNIOR engine.
Clutch: Concerning the clutch housing with holes, it is mandatory to use the cover according to the ROK GP JUNIOR engine identification sheet (technical fiche).
Chassis: Brand and model must hold current CIK FIA homologation or CIK FIA homologation of the previous homologation period, the use of bodyworks and rear wheel protection RDS ACI SPORT Karting Technical Regulation 2026 art. 4.14 and 4.15 is mandatory.
Front fairing: Mounting kit complying with the RDS ACI SPORT Karting Technical Regulation 2026, art. 4.14.2 – art. 4.14.3 comma b-c-d-e-f-g.
Pre-Race checks: Every driver can use:
2 chassis of the same **Brand**
2 engines.

1.3 SENIOR ROK - ROK EXPERT - ROK EXPERT PLUS
Engine: Vortex ROK SVR 125cc complying with the current ROK SVR engine identification sheet (technical fiche) approved by ACI SPORT.
Carburettor: DELL'ORTO VHSH 30, it must maintain its original structure, it shall mount the same parts and shall be the same as the ones in the engine identification sheet (technical fiche) in order to allow at any time, the comparison of all components with a new carburettor. **Any kind of processing, connection,**

polishing, addition or removal of material is forbidden. **The only components of the carburettor that can be changed are those described in the table in the engine fiche (technical fiche).**
Cooling: Use of **only one (1)** radiator.
It is mandatory to use the original complete water pump, water pump pulley and radiator supplied with the engine.
The aforementioned parts must comply with the identification sheet (technical fiche) of the ROK SVR engine.
Inlet silencer: model KG Nitro 23 and KG Power Base 23, complying with the related CIK FIA homologation sheets.
Chassis: Brand and model must hold current CIK FIA homologation or CIK FIA homologation of the previous homologation period, the use of bodyworks and rear wheel protection RDS ACI SPORT Karting Technical Regulation 2026 art. 4.14 and 4.15 is mandatory.
Front fairing: Mounting kit complying with the RDS ACI SPORT Karting Technical Regulation 2026, art. 4.14.2 – art. 4.14.3 comma b-c-d-e-f-g.
Pre-Race checks: Every driver can use:
2 chassis of the same **Brand**
2 engines.

1.4 SUPER ROK
Engine: Vortex ROK DVS 125cc complying with the current ROK DVS engine identification sheet (technical fiche) approved by ACI SPORT.
Carburettor: IBEA DVS or TILLOTSON DVS branded Rok DVS; the carburettor must maintain its original structure, it shall mount the same parts and shall be the same as the ones in the engine identification sheet (technical fiche), in order to allow at any time, the comparison of all components with a new carburettor. **Any kind of processing, connection, polishing, addition or removal of material is forbidden**.
Cooling: Use of **only one (1)** radiator.
It is mandatory to use the original OTK complete water pump, water pump pulley and radiator as per identification sheet (technical fiche) of the ROK DVS engine.
Chassis: Brand and model must hold current CIK FIA homologation or CIK FIA homologation of the previous homologation period, the use of bodyworks and rear wheel protection RDS ACI SPORT Karting Technical Regulation 2026 art. 4.14 and 4.15 is mandatory.
Front fairing: Mounting kit complying with the RDS ACI SPORT Karting Technical Regulation 2026, art. 4.14.2 – art. 4.14.3 comma b-c-d-e-f-g.
Pre-Race checks: Every driver can use
2 chassis of the same **Brand**
2 engines.

1.5 SHIFTER ROK
Engine: Vortex SHIFTER ROK 125cc complying with the current SHIFTER ROK engine identification sheet (technical fiche) approved by ACI SPORT.
Carburettor: DELL'ORTO VHSH 30, it must maintain its original structure, it shall mount the same parts and shall be the same as the ones in the engine identification sheet (technical fiche) in order to allow at any time, the comparison of all components with a new carburettor. **Any kind of processing, connection, polishing, addition or removal of material is forbidden.**
Cooling: Use of **only one (1)** radiator.
It is mandatory to use the original OTK radiator as per identification sheet (technical fiche) of the ROK SHIFTER engine.
Inlet silencer: model KG Power Base 30, complying with the related CIK FIA homologation sheet.

Chassis: Brand and model must hold current CIK FIA homologation or CIK FIA homologation of the previous homologation period, the use of bodyworks and rear wheel protection RDS ACI SPORT Karting Technical Regulation 2026 art. 4.14 and 4.15 is mandatory.
Front fairing: Mounting kit complying with the RDS ACI SPORT Karting Technical Regulation 2026, art. 4.14.2 – art. 4.14.3 comma b-c-d-e-f-g.
Pre-Race checks: Every driver can use
2 chassis of the same **Brand**
2 engines.

1.6.1 VLR JUNIOR ROK

Engine: Vortex VLR JUNIOR ROK 100cc complying with the current VLR JUNIOR ROK engine identification sheet (technical fiche) approved by ACI SPORT.
Carburettor: TILLOTSON HW 38A, it must maintain its original structure, it shall mount the same parts and shall be the same as the ones in the engine identification sheet (technical fiche), in order to allow at any time, the comparison of all components with a new carburettor. **Any kind of processing, connection, polishing, addition or removal of material is forbidden**. **The only parts of the carburettor that can be changed are those listed in the table included in the engine identification sheet (technical fiche).**
Clutch: Concerning the clutch housing with holes, it is mandatory to use the cover according to the engine identification sheet (technical fiche) of the VLR JUNIOR ROK engine.
Ignition: Described in the engine identification sheet (technical fiche). The admitted spark plug is the one described in the VLR JUNIOR ROK engine identification sheet (technical fiche).
Inlet silencer: model ~~KG Power Base 23~~ Arrow LA22, complying ~~with the related CIK FIA homologation sheets~~ with the current VLR JUNIOR ROK engine identification sheet (technical fiche) approved by ACI SPORT.
Chassis: Brand and model must hold current CIK FIA homologation or CIK FIA homologation of the previous homologation period, the use of bodyworks and rear wheel protection RDS ACI SPORT Karting Technical Regulation 2026 art. 4.14 and 4.15 is mandatory.
Front fairing: Mounting kit complying with the RDS ACI SPORT Karting Technical Regulation 2026, art. 4.14.2 art. 4.14.3 comma b-c-d-e-f-g
Pre-Race checks: Every driver can use:
2 chassis of the same **Brand**
1 engine provided and allocated by drawing lots by the Promoter.

1.6.2 VLR ROK

Engine: Vortex VLR ROK 100cc complying with the current VLR ROK engine identification sheet (technical fiche) approved by ACI SPORT.
Carburettor: TILLOTSON HW 38A, it must maintain its original structure, it shall mount the same parts and shall be the same as the ones in the engine identification sheet (technical fiche), in order to allow at any time, the comparison of all components with a new carburettor. **Any kind of processing, connection, polishing, addition or removal of material is forbidden**. **The only parts of the carburettor that can be changed are those listed in the table included in the engine identification sheet (technical fiche).**
Clutch: Concerning the clutch housing with holes, it is mandatory to use the cover according to the engine identification sheet (technical fiche) of the VLR ROK engine.
Ignition: Described in the engine identification sheet (technical fiche). The admitted spark plug is the one described in the VLR ROK engine identification sheet (technical fiche).
Inlet silencer: model ~~KG Power Base 23~~ Arrow LA22, complying ~~with the related CIK FIA homologation sheets~~ with the current VLR JUNIOR ROK engine identification sheet (technical fiche) approved by ACI SPORT.
Chassis: Brand and model must hold current CIK FIA homologation or CIK FIA homologation of the previous homologation period, the use of bodyworks and rear wheel protection RDS ACI SPORT Karting Technical Regulation 2026 art. 4.14 and 4.15 is mandatory.

Front fairing: Mounting kit complying with the RDS ACI SPORT Karting Technical Regulation 2026, art. 4.14.2 art. 4.14.3 comma b-c-d-e-f-g

Pre-Race checks: Every driver can use:
2 chassis of the same **Brand**
1 engine provided and allocated by drawing lots by the Promoter.

1.6.3 Rok Cup Superfinal's VLR JUNIOR ROK AND VLR ROK ENGINES DISTRIBUTION
In the VLR junior ROK and VLR ROK categories the Rok Cup Superfinal will be reserved (limited number); the maximum number of drivers admitted for each category will be of 36 and will be race with the ENGINES provided and allocated by drawing lots by the Promoter.
The maximum number of admitted drivers could differ and in this case, it will be specified in the Specific Race Regulations (RPG).

With ENGINE or ENGINES, we mean: VLR Junior ROK/VLR ROK engine complete with accessories.
The engines and the parts supplied with will be identified with the same serial number and will be equipped with seals.

ENGINES will be distributed/assigned to each driver by drawing lots which will be done just before the official free practices in the presence of all drivers. The ENGINES must be used starting from the official free practices.

The ENGINE must be strictly original as supplied by the Promoter. It is not permitted to change, modify, add/remove any part, component, adjustment of the ENGINE or choose Options other than those provided.

At the end of each race session during the event, there might be a further draw for the ENGINE; in this case, each driver will be requested to leave the ENGINE and attend a new draw.
At the end of each stage of the race, the designated ACI Stewards, upon request of the designated ACI Technical Stewards, may decide to reassign ENGINES to some drivers only without having to do a new draw; this procedure will be carried out exclusively by the designated ACI Technical Stewards.
Guidelines and instructions regarding additional draws/reassignments of the ENGINE and/or related parts will be communicated to the drivers during the race by the designated ACI Technical Stewards.

Starting grid: Vortex technical team / staff may provide assistance on the kart.

Every time the drivers will return the ENGINES, a Vortex technician will verify eventual breaks, damages and/or missing parts and that seals are integral, except in the case of such items being removed by Vortex technicians and/or Technical Marshalls. In case of damage and /or missing parts, the relating costs will be charged to the driver who has just returned the ENGINE.
ENGINES must be returned clean at the end of the race.

The rental of the ENGINE will be managed by the Promoter itself, as indicated.
The rental cost of the ENGINE will be defined by the Promoter.

GEAR RATIO, CHAIN, REAR SPROCKET
VLR Rok e VLR Junior Rok Categories
For the VLR Rok e VLR Junior Rok Categories the gear ratio will be indicated by the Promoter before the race via an Official Communication,

2.4 ROK CUP SUPERFINAL TIRES
- It is mandatory for all Drivers to purchase tires at the track
- Use of MiniRAE Lite tool (Technical Karting RDS 2026)

For all categories, it is mandatory to purchase slick and rain tires to be used starting from the qualifying practices up to the final phase of the race, except for the warm-up sessions. Tires will be delivered at the parc fermé. Management of tires will be done by Barcode system*.

*Regarding the management and distribution of tires, the Promoter also reserves the right to extend the barcode scanning system, at any time and for any Rok Cup race, with the parc fermé system for one or more Rok categories, upon a case-by-case decision.
In such cases, tire management will be carried out with a storage in the parc fermé and will be organised as follows:

- tires will be distributed according to the official schedule, within the parc fermé, using the usual purchase voucher. Each tire has a barcode: the designated staff will scan the barcodes into the system and write the driver's race number on both sides of each tire handed over.
- At least 1 set of tires must be fitted immediately to the rims within the parc fermé at the time of distribution (Each competitor must have a sufficient number of rims); this operation cannot be postponed to a later time, and the tires must then be returned to the designated staff for storage.
  The remaining tires purchased and included in the tire voucher must be stored inside the parc fermé; there is no requirement to fit their rims immediately. The remaining tires may be fitted to their rims at any time, provided this is done exclusively within the parc fermé.
  The same procedure will apply to the possible distribution and subsequent fitting of rain tires for the designated categories.
- Tires fitted to rims will be returned to participants before each race phase, starting with qualifying heats, in accordance with the timetable; they must be fitted to the chassis in the parc fermé and returned immediately to the designated staff in the parc fermé at the end of each race phase, up to the final.

Admitted tires are the following:

MINI ROK, MINI ROK U10 CLASSES:
- slick tires: LeVanto KRT 10x4.00-5/11x5.00-5
- rain tires: LeVanto MRT WET 10x4.00-5''/11x5.00-5''

Slick tires to be used from the free qualifying practices to the Final:
6 slick tires= 3 front slick tires + 3 rear slick tires to be MANDATORY PURCHASED. Slick tires will have to be taken at the parc fermé upon delivery of the VOUCHER.
The collected tires must be used from the qualifying practices to the final, except for warm-up sessions.

Rain tires to be used from the qualifying practices to the Final:
In the event that the race director declares a wet track: 1 set of rain tires = 2 front tires + 2 rear tires to be MANDATORY PURCHASED. Rain tires will have to be taken at the parc fermé upon delivery of the VOUCHER, to be purchased at the track.
At the competitor's discretion, 1 optional additional set of rain tires may be used (2 front tires + 2 rear tires), in this case it has to be MANDATORY PURCHASED.
The additional set of rain tires will have to be taken at the parc fermé upon delivery of the VOUCHER, to be purchased at the track.
The collected tires must be used from the moment in which they are collected to the final, except for warm-up sessions.

JUNIOR ROK / SENIOR ROK / SUPER ROK / SHIFTER ROK/EXPERT ROK / EXPERT ROK PLUS / VLR JUNIOR ROK/ VLR ROK CLASSES:
- slick tires: LeVanto KRT 10x4.50-5/11x7.10-5
- rain tires: LeVanto KRT WET 4.2/10.0 - 5 + 6.0/11.0- 5

Slick tires to be used from the qualifying practices to the Final:
2 SETS = 4 front slick tires + 4 rear slick tires to be MANDATORY PURCHASED. Slick tires will have to be taken at the parc fermé upon delivery of the VOUCHER.
The collected tires must be used from the qualifying practices to the final, except for warm-up sessions.
Rain tires to be used from the qualifying practices to the Final:

In the event that the race director declares a wet track: 2 sets of rain tires = 4 front tires + 4 rear tires to be MANDATORY PURCHASED. Rain tires will have to be taken at the parc fermé upon delivery of the VOUCHER, to be purchased at the track.
The collected tires must be used from the moment in which they are collected to the final, except for warm-up sessions.

With reference to the tire tolerances please note that the tolerance on the circumference is ±20mm measured with tire mounted on the wheel and with operating pressure (1 bar).
This measurement will be made by the technical Scrutineer in charge of the race.

The Specific Race Regulation might provide different provisions regarding quantity, brand and type of tires as well as their management, distribution and checks.

As for the checks, please refer to Art. 4.16 of the RDS ACI SPORT Karting Technical Regulation 2026.

3. FUEL AND LUBRICANT FOR FUEL MIXTURE
For all ROK Cup Trophy categories the lubricant to be used for the fuel mixture is ENI KART 2T and the maximum percentage (%) of oil for the fuel mixture has been set at 6%.
For the checks, please refer to Art. 4.19 of the RDS ACI SPORT and Karting Technical Regulations 2026.

On the occasion of the Rok Cup Winter Trophy and of the ROK Cup Superfinal 2026 for all ROK categories (Mini ROK, Junior ROK, Senior ROK, Super ROK, Shifter ROK, Expert ROK, Expert ROK Plus, VLR Junior ROK, VLR ROK) the fuel to be used will be PANTA 98-octane distributed directly at the track.

4. LUBRICANT
Counter shafts mechanism chambers and transmission gear set chamber must be filled with lubricant oil.

5. MINIMUM WEIGHT FOR EACH CATEGORY
The minimum weight of kart + driver (in race conditions) for each category is the following:

MINI ROK	110 kg
MINI ROK U10	110 kg
JUNIOR ROK	145 kg
SENIOR ROK	160 kg
EXPERT ROK	170 kg
EXPERT ROK PLUS	170 kg
SUPER ROK	155 kg
SHIFTER ROK	180 kg
VLR JUNIOR ROK	145 kg
VLR ROK	160 kg

(This is just a translation, in case of interpretative conflicts, the Italian text approved by ACI SPORT will prevail)

6. TECHNICAL CHECKS

During the technical checks, the specifications in this Technical Regulation, the engine identification sheets (technical fiches) duly approved by ACI SPORT registered together with this regulation, and the RDS ACI SPORT Karting Technical Regulation 2026 will be taken into consideration. **The tolerances described in the engine identification sheets are construction tolerances**.

General tolerances complying to ISO 2768-m, as here below reported:

ISO 2768-m	DEVIAZIONI CONSENTITE PER RANGE					
	DA 0,5 mm : A 3 mm	DA >3 mm : A 6 mm	DA >6 mm : A 30 mm	DA >30 mm : A 120 mm	DA >120 mm : A 400 mm	
QUOTE LINEARI	± 0,1 mm	± 0,1 mm	± 0,2 mm	± 0,3 mm	± 0,5 mm	
RAGGI ESTERNI	± 0,2 mm	± 0,5 mm	± 1 mm			
ALTEZZE SMUSSI	± 0,2 mm	± 0,5 mm	± 1 mm			

Moreover, the ACI SPORT Technical Scrutineer, upon authorization request to the Sporting Marshals, may at any time refer to any comparisons to value the conformity of any parts, with details provided by the promoter. The Technical Scrutineers also have the possibility, upon authorization request to the Sporing Marshals, to replace any part of the engine with an original spare part supplied by the promoter.

PROCEDURE FOR DELIVERY, USE AND RETURN OF SPARE PARTS IN PARC FERMÉ

Original spare parts, supplied by the promoter, will be randomly distributed by the Technical Scrutineers to the drivers/competitors indicated, inside the Parc Fermé, before the beginning of the race phase.
The spare parts received must be fitted to the kart, tested if necessary (specifically ignitions or coils) and used during the race phase indicated by the Scrutineers.
The correct assembly and use of the spare parts received is under responsibility of both drivers and their competitors.
Spare parts must be returned to the Scrutineers at the end of the race phase, always inside the parc fermé.
Original spare parts, supplied by the promoter, will be recognisable by a marking/sealing/adhesive seal or other.

For the delivery of some original spare parts, supplied by the promoter, the following procedure could be used:

1) The Technical Scrutineers inform the drivers to show up in parc fermé without their own spare parts, for which it was decided to use the original spare parts supplied by the promoter.
2) The Technical Scrutineers give each driver an identification card reporting his race number.
3) The Technical Scrutineers give the original spare parts supplied by the promoter to the drivers upon delivery of their identification card.
4) Drivers use the original spare parts supplied by the promoter during the race phase concerned.
5) At the end of the race phase, the drivers return the original spare parts supplied by the promoter to the Technical Scrutineers, upon receipt of their identification card.

   And this way for all phases of the race in which the Technical Scrutineers decide to use the original spare parts supplied by the promoter.

6) At the end of the last phase of the race, the drivers return the original spare parts supplied by the promoter to the Technical Scrutineers without receiving their identification card back, which will be held by the Technical Scrutineers.

(This is just a translation, in case of interpretative conflicts, the Italian text approved by ACI SPORT will prevail)

6.1 MARKING

Each part of the following MINI ROK, MINI ROK U10, ROK SVR, ROK GP JUNIOR, ROK DVS, ROK SHIFTER, VLR JUNIOR ROK, VLR ROK engines has a mark which allows the recognition and ensures the originality and the conformity of the part during the technical checks.
The marks used for marking the parts are those below:


















6.2 EXHAUST MANIFOLD AND INLET GASKETS

Exhaust manifolds and inlet gaskets sealing cannot be anyhow decreased, restricted or blocked.

7. PROCEDURE FOR MEASURING THE VOLUME OF THE COMBUSTION CHAMBER

1. Remove the engine from the chassis;
2. Wait until the engine is at room temperature (the organizer must supply appropriate cooling fans);
3. Remove the cylinder head to check the protrusion of the spark plug inside the combustion chamber;
4. Remove the spark plug (check the 18.5 mm dimension);
5. Screw the plug insert in place of the spark plug (the plug insert, tightened on the cylinder head, must not extend beyond the upper part of the combustion chamber. It must be fixed to the head cylinder exactly in the same way as the spark plug measuring 18.5 mm);
6. Make the top part of the piston and the periphery of the cylinder waterproof using grease;
7. Place the piston at top dead centre and block the crankshaft;
8. Carefully remove the exceeding grease;
9. Make sure the engine lies flat;
10. Place the cylinder head back and screw it in at the tightening torque recommended by the Manufacturer;
11. With a laboratory graduated burette (mechanical A-type or electronic), fill the combustion chamber with **"CASTROL ATF DEXRON" VI (6) "RED" type OIL** to the uppermost part of the top edge of the plug insert;
12. The measured volume must be as requested and determined by RDS and described in the following table, for each class.

(This is just a translation, in case of interpretative conflicts, the Italian text approved by ACI SPORT will prevail)

Table of the minimum value of the combustion chamber volume, of the classes mentioned below:

Category	Volume of the combustion chamber	
MINI ROK/MINI ROK U10	4,8cm³. + insert 2 cm³	**6,8**cm³ **Min.**
ROK GP Junior	7,5cm³ + insert 2 cm³	**9,5cm³ Min.**
ROK SVR	8,7cm³ + insert 2 cm³	**10,7**cm³ **Min.**
ROK DVS	9cm³ + insert 2 cm³	**11**cm³ **Min.**
ROK SHIFTER	11cm³ + insert 2 cm³	**13**cm³ **Min.**
VLR JUNIOR ROK	8,6 cm³ + insert 2 cm³	**10,6**cm³ **Min.**
VLR ROK	8,6cm³ + insert 2 cm³	**10,6**cm³ **Min.**

Plug Insert Dimensions

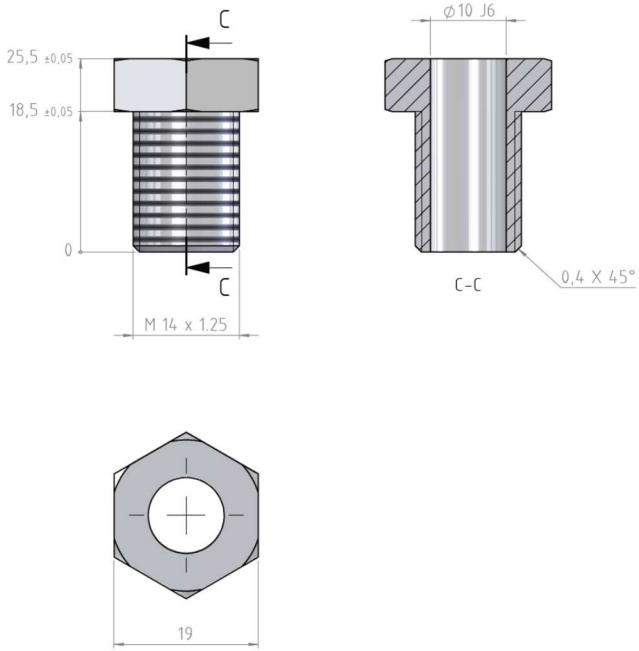

(This is just a translation, in case of interpretative conflicts, the Italian text approved by ACI SPORT will prevail)

7.1 PROCEDURE FOR MEASURING THE MINIMUM DISTANCE BETWEEN THE SEAT OF THE POWER VALVE AND THE PISTON

1. Wait until the engine is at room temperature (the organizer must supply appropriate cooling fans).
2. Remove the valve system.
3. Assemble the gauge number 0428730040 supplied by Vortex in place of the valve system.
4. Insert and slide the gauge 8011 for the ROK GP JUNIOR engine and the gauge 8012 for the ROK DVS engine as shown in the picture.
5. The gauges 8011 and 8012 must lean against the flat surface of the gauge mounted in place of the valve system without touching the piston skirt.
6. In case of contact of the gauge 8011/8012 against the piston, check the distance between the gauge 8011/8012 and 0428730040 with a feeler gauge.

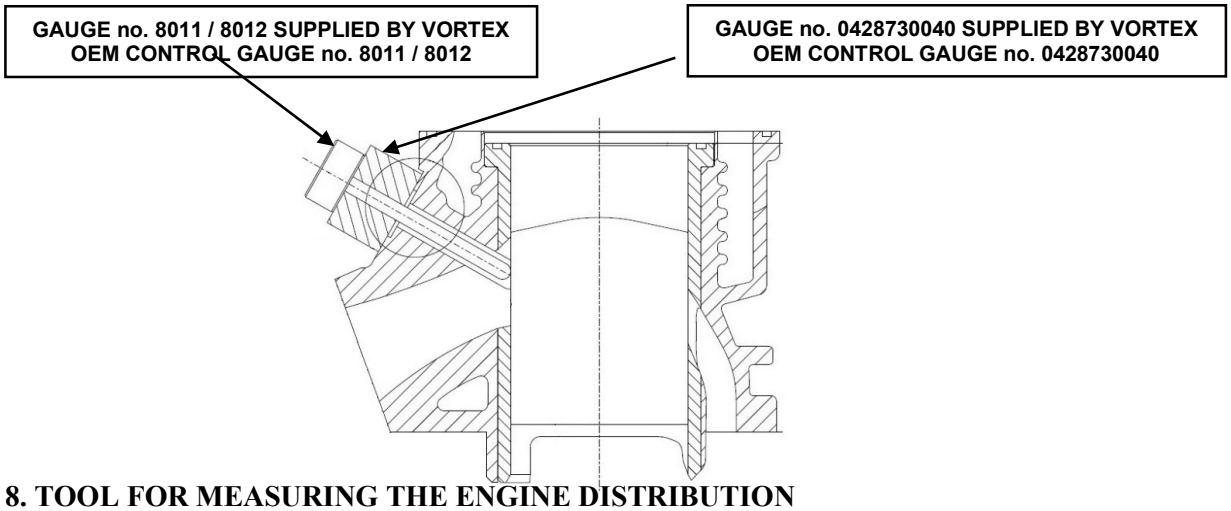

8. TOOL FOR MEASURING THE ENGINE DISTRIBUTION

For all ROK categories where the control is required, the exhaust opening angle, inlet opening angle, transfer opening angle and angle between exhaust and inlet must be measured with a 0,20 mm thick and 5 mm wide wedge (see drawing below).

The reading is made by using a digital display with encoder measuring device, or with minimum diameter 200 mm graduated disc.

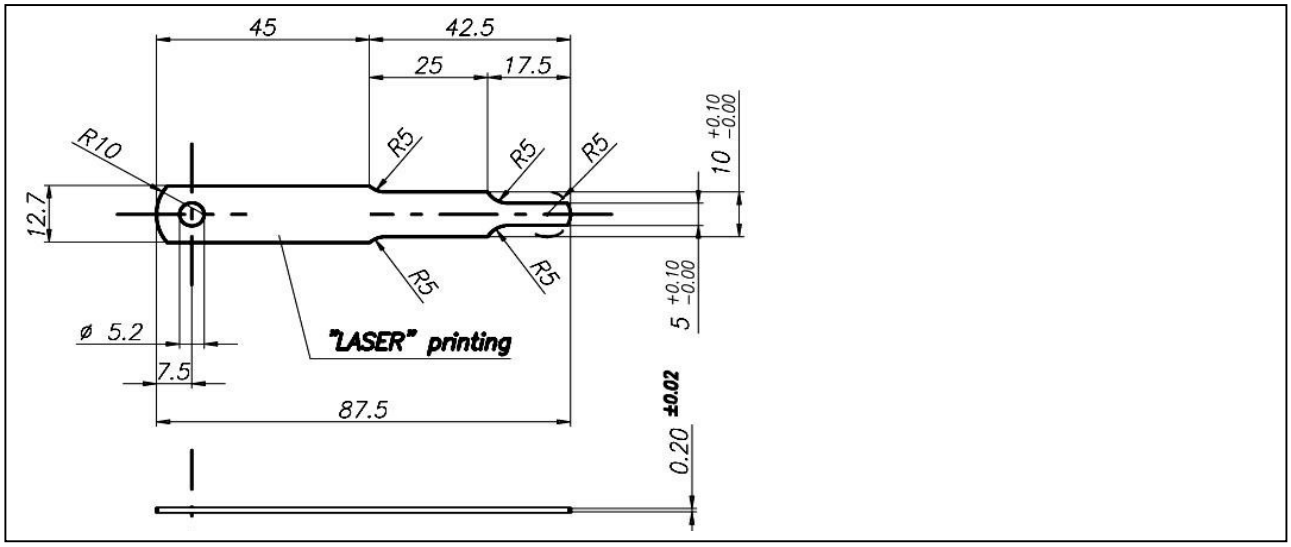

(This is just a translation, in case of interpretative conflicts, the Italian text approved by ACI SPORT will prevail)

8.1 CONTROL OF THE ADMISSION GAP OF MINI ROK/MINI ROK U10 ENGINE

<table>
<tr>
<td>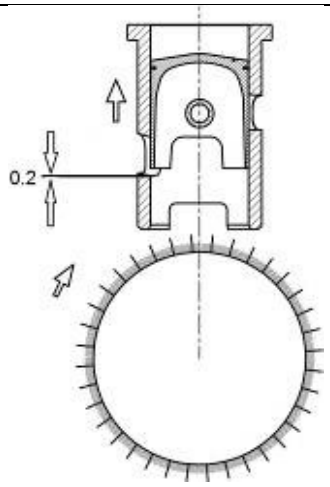

1</td>
<td>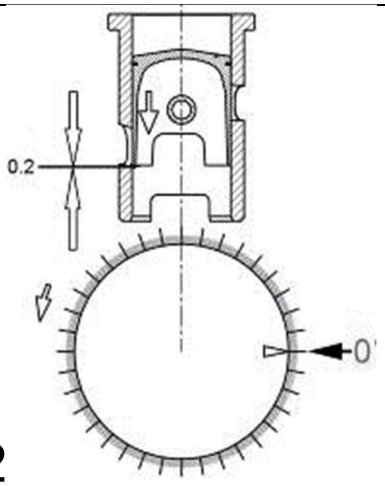

2</td>
</tr>
<tr>
<td>RUOTARE IN SENSO ORARIO PER ALZARE IL PISTONE E PERMETTERE L'INSERIMENTO DELLO SPESSIMETRO CONTRO LO SPIGOLO INFERIORE DELL'ASPIRAZIONE

TURN CLOCKWISE AND LIFT THE PISTON TO ALLOW THE INSERTION OF THE FEELER GAUGE AGAINST THE LOWER INLET EDGE</td>
<td>RUOTARE IN SENSO ANTIORARIO PER ABBASSARE IL PISTONE FINO AD INCONTRARE LO SPESSIMETRO APPOGGIATO ALLO SPIGOLO DELL'ASPIRAZIONEIN QUESTA FASE SETTARE LA POSIZIONE DI 0°

TURN COUNTERCLOCKWISE AND LOWER THE PISTON UNTIL IT MEETS THE FEELER-GAUGE RESTING AT THE EXHAUST EDGE, AT THIS STAGE SET THE SCALE ON THE POSITION OF 0 DEGREES</td>
</tr>
<tr>
<td>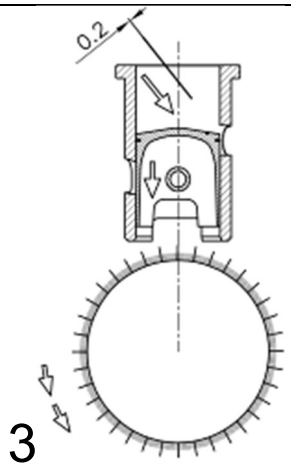

3</td>
<td>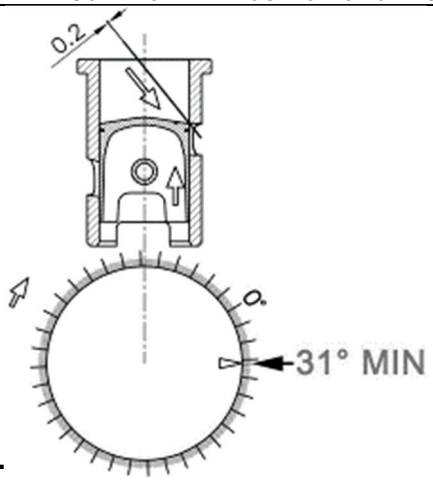

4</td>
</tr>
<tr>
<td>LIBERARE LO SPESSIMETRO QUINDI RUOTANDO IN SENSO ANTIORARIO ABBASSARE IL PISTONE PER PERMETTERE L'INSERIMENTO DELLO SPESSIMETRO SOTTO LO SPIGOLO SUPERIORE DELLO SCARICO

RELEASE THE FEELER GAUGE AND TURNING COUNTERCLOCKWISE LOWER THE PISTON TO ALLOW THE INSERTION OF THE FEELER GAUGE UNDER THE UPPER EDGE OF THE EXHAUST</td>
<td>RUOTANDO IN SENSO CONTRARIO ALZARE IL PISTONE FINO AD INCONTRARE LO SPESSIMETRO APPOGGIATO ALLO SPIGOLO DELLO SCARICO E CONTROLLARE CHE L'ANGOLO DI SPOSTAMENTO NON SIA INFERIORE A 31°

TURN CLOCKWISE TO LIFT THE PISTON UNTIL IT MEETS THE FEELER GAUGE RESTING AT THE EXHAUST EDGE. AT THIS STAGE CHECK THAT THE EDGE OF DISPLACEMENTS OF THE VERNIER MATCHES NOT LESS THAN 31 DEGREES
The edge of displacements of the vernier match not less than 31 degrees</td>
</tr>
</table>

8.2 SQUISH HEIGHT MEASUREMENT
Squish height measurement must be done by means of 1.5 mm size round soldering wire.

8.3 TECHNICAL CHECK CONSULTANT and TECHNICAL CHECKS
On the occasion of each race and for the technical checks of the engine only, the Promoter OTK Kart Group may request the presence of his own specialized technician to support the Technical Scrutineers. The check of the chassis and other details is assigned to ACI SPORT Technical Scrutineers. The procedures for the technical check of the engine and/or any other parts must be performed only by Technical Scrutineers appointed by ACI SPORT for the event, in compliance with the 2026 RDS ACI SPORT Karting; for any complaints and/or appeals refer to 2026 RNS ACI SPORT.

Moreover, the Sporting Scrutineers may request the parts to be deeper checked at the Manufacturer's headquarters. This request, duly justified and described, must be done by the Technical Scrutineer to the Sporting Scrutineers.
The Promoter or the Organizer will deliver the part/s duly sealed with the relating official document of the Sporting Scrutineers and Technical Scrutineers to the Manufacturer of the part/s.
The parts will be checked at the Manufacturer's seat, by the presence of the entrant and the Technical Scrutineer.
Tests/crash tests can be done on such parts.
The parts no longer usable will be replaced by the Promoter OTK Kart Group srl only in case of proven compliance.
The parts no longer usable and replaced by the Promoter OTK Kart Group srl will not be returned to the entrant.
The Technical Scrutineer will then send the check result to the President of the Sporting Scrutineers.
The logistic costs will be paid by the Promoter OTK Kart Group srl if the part/s is/are respecting the Regulations, otherwise the entrant will pay them.

9. CLUTCH
For **all ROK categories:**
-the clutch must be dry; any type of internal lubrication is forbidden.

For the **Junior ROK - Senior ROK - Expert ROK - Expert Plus ROK – VLR Junior ROK – VLR ROK** categories, in addition to the provisions of the engine identification sheets (technical fiches), the following clutch checks are admitted with driver onboard:
- from stationary position in pre-grid and at the end of the race, in order to verify the first engagement of the clutch at 4000 rpm (after checking the whole weight); the clutch must be 100% direct-drive at the minimum 5000 rpm in all conditions;
- through the UNILOG** data acquisition system provided by the Promoter, in order to verify the direct-drive of the clutch in all conditions;
- through speed bump.

For the **Mini ROK and Mini ROK U10** categories, in addition to the provisions of the engine identification sheets (technical fiches), the following clutch checks with driver onboard are admitted:
- from stationary position in pre-grid and at the end of the race, in order to verify the first engagement of the clutch at 3500 rpm (after checking the whole weight); the clutch must be 100% direct-drive at the minimum 4500 rpm in all conditions;
- through the UNILOG** data acquisition system provided by the Promoter, in order to verify the direct-drive of the clutch in all conditions;
- through speed bump.

****Any braking or damage to the UNILOG device supplied for the event is under the entrant's responsibility.**

10. RACING SPORTSWEAR

It is mandatory for drivers of all ROK Cup Trophy categories to use racing sportswear (**racing suit and helmet**) complying with homologation and safety measures provided by ACI SPORT and CIK-FIA.

11.TRANSMISSION

For all Rok categories, with the exception of the Shifter Rok category, it is allowed only the use of the engine sprocket and the rear sprocket for chains type "219".
For the check of the chain type "219", see the drawing below.

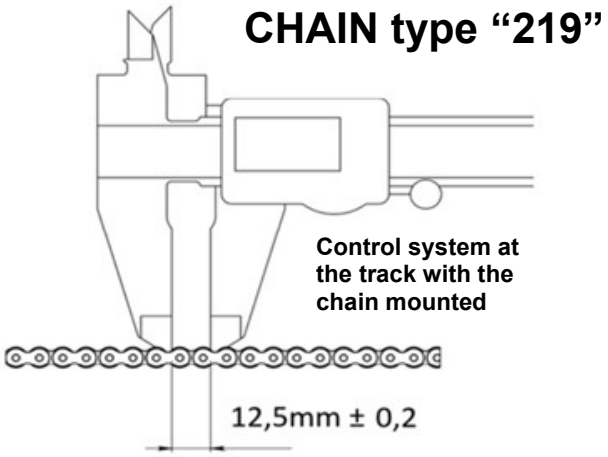

Rear Sprocket: the rear sprocket to be used must be marked OTK as the one in the photo, pitch 219, and the outline design must be the same as the one in the photo.

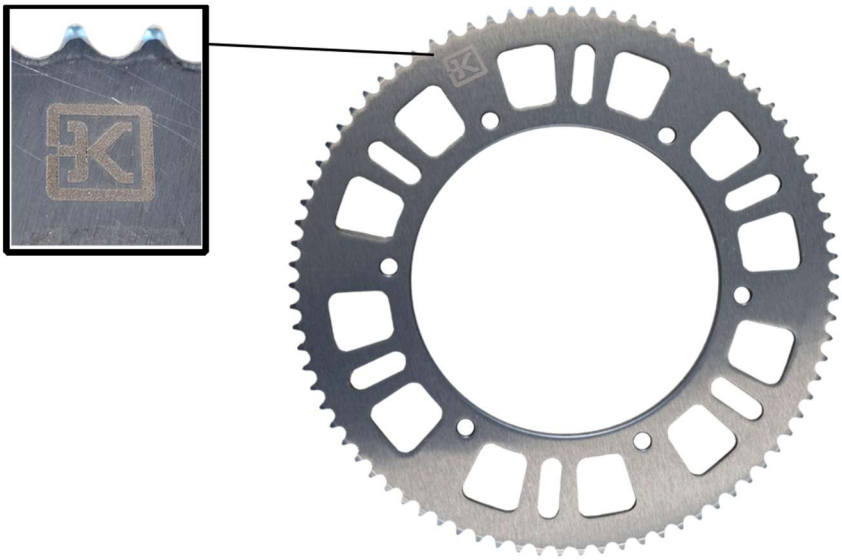

For anything not specified please refer to the Rok Cup 2026 Trophy Technical Regulations.